No.50 (79-14)

Advertising and Welfare: A Pedagogical Note

Hiroyuki Odagiri

September, 1979

ABSTRACT

This paper gives a pedagogical note on the welfare implications of advertising by a monopolist based on two recent works: Dixit and Norman, and Kotowitz and Mathewson. Whether the profit-maximizing level of advertising is more than or less than the socially optimal level is shown to depend on what criterion of social welfare is used and on whether the price elasticity of demand increases or decreases after the advertising. Some unsolved questions on advertising are also raised.

Is advertising an adequate means of supplying information? Is it not excessively supplied? Is it merely supplying information consumers want to know or is it persuading consumers to buy what they do not initially intend to buy? After a generation since Kaldor's pathbreaking (but not necessarily rigorous) article addressed to these questions concerning the welfare implications of advertising, two group of authors have recently attempted to offer formal analyses to compare the profit-maximizing level of advertising by a monopolist with the socially optimal level. Interestingly, the two are based on different views on the nature of advertising and have come up with conflicting results. On the one hand, Dixit and Norman (hereafter DN) viewed advertising as purely persuasive and claimed that it is in excess of the socially optimal level. On the other hand, Kotowitz and Mathewson (hereafter KM) viewed advertising as purely informative and asserted that its supply is less than the socially optimal level.

This paper purports to synthesize the two and clarify what made them conclude differently. In particular, we will show that the result is sensitive to what criterion is used to evaluate the contribution of advertising to consumer's surplus and to whether the price elasticity of demand for the commodity increases or decreases after advertising. Our aim is pedagogical; hence, it is warned that only the essences of the two works are to be discussed here. The paper is to be concluded with some remarks on unsolved questions concerning the welfare implications of advertising.

1 ADVERTISING AND WELFARE: TWO CRITERIA

Both DN and KM consider an advertising monopolist with a constant marginal cost (MC) of production.[1] All the markets except that of our current concern are assumed not affected by the change in the level of advertising by the monopolist; in this sense, the analysis is partial. We first consider the level of social welfare W when the price p, the output Q and the amount of advertising a are determined by the monopolist so as to maximize its profit. Next we consider W when a is forced to increase by one unit and p and Q are accordingly optimally adjusted by the monopolist. Let subscript 0 for any variable denote the value in the former situation and subscript 1 the value in the latter situation. Our problem is now formally stated as follows: is $\Delta W \equiv W_1 - W_0$ positive or negative? If it is positive, advertising should be increased from the viewpoint of the society; i.e., the profit-maximizing level of advertising is less than the socially optimal level. If it is negative, advertising should be decreased; i.e., the profit-maximizing level is more than the socially optimal level.

Both DN and KM adopt the sum of consumer's surplus CS and the monopolist's profit Π as the criteria of social welfare W; hence, $\Delta W = \Delta CS + \Delta\Pi$. In view of the fact that p_0, Q_0 and a_0 maximize Π, however, $\Delta\Pi$ due to a unit change in a should vanish at $a = a_0$ and consequently we can safely assume that $\Delta W = \Delta CS$. This is the trick used in both analyses, the limitation of which we will discuss later.

Consider Fig.1 in which case $p_1 > p_0$ and $Q_1 > Q_0$. At first sight, consumer's surplus before the change may appear to be the sum of the areas denoted by B and C and consumer's surplus after the change to be A + B + E. Is it correct, then, to say that

$\Delta CS \equiv CS_1 - CS_0 = (A + B + E) - (B + C) = A + E - C$? DN and KM give completely different answers to this question. Let us start with DN.

DN regards advertising as purely persuasive. That is to say, DN considers the case where every consumer knows of the product (including the price, the quality, and where to buy) and the only role of advertising is to persuade him that the satisfaction from its consumption is more than he realizes now. The upward shift of the demand curve, therefore, reflects the created (maybe false) belief of the consumers that its consumption makes them feel happier than they thought it to be before. If this is the case, then it is necessary to compare the levels of CS before and after the additional advertising based on a common standard of taste, either on preadvertising standard or postadvertising standard following DN's terminology, because otherwise the created increase in utility level due to advertising from the same pattern of consumption is included in ΔCS which is a procedure difficult to justify. Say we adopt the postadvertising standard of taste. Then, consumer's surplus after the change is $A + B + E$ as usual but the consumer's surplus for those who consumed before the change is not $B + C$ but $A + B + C + D$. Hence,

$$\Delta W_{DN} = \Delta CS_{DN} = (A + B + C + D) - (A + B + E) = E - C - D$$
$$\gtreqless 0 \quad \text{as} \quad E \gtreqless C + D = Q_0(\Delta p)$$

If E is negligibly small for a small change in a as assumed by DN, $\Delta W_{DN} < 0$. Thus follows their conclusion that advertising is excessive.

KM, on the contrary, considers the case in which advertising is purely informative, i.e., the case in which there are many consumers who do not know of the product and the only role of advertising is to let these consumers know of the product correctly. In other words, consumers'

preferences are thought to be independent of advertising and advertising only actualizes the potential demand of the ignorant consumers. As a result, when the amount of advertising is increased, more consumers join the market to purchase the commodity and this shifts the demand curve to the right. If this is the case, then the area $A + D$ must be included in ΔCS since it represents the increase in utility level of those who were informed by the additional advertising and started buying. Thus according to the KM criterion,

$$\Delta W_{KM} = \Delta CS_{KM} = (A + B + E) - (B + C) = A + E - C$$
$$\gtreqless 0 \quad \text{as} \quad A + E \gtreqless C$$

Even if E is negligibly small as argued by DN, therefore, ΔW_{KM} may well be positive.[2]

In sum, if $p_1 > p_0$, $\Delta W_{DN} < \Delta W_{KM}$, $\Delta W_{DN} < 0$ if E is small, but ΔW_{KM} may or may not be negative even if E is negligible.

Now consider Fig.2 in which $p_1 < p_0$, i.e., the case where the monopolist lowers the price as the demand curve shifts to the right after advertising. Applying the two definitions of consumer's surplus to this situation yields the following result:

$$\Delta W_{DN} = (A + B + C + D + E) - (A + B) = C + D + E > 0$$
$$\Delta W_{KM} = (A + B + C + D + E) - B = A + C + D + E > \Delta W_{DN} > 0^{3}.$$

Therefore, in either of the two criteria, W increases as advertising is increased, implying that the profit-maximizing level of advertising is less than the socially optimal level. This suggests that, if the demand increase due to advertising is such as to lower the price the monopolist

charges, it is desirable for the society to have the monopolist advertise more regardless of whether the advertising is informative or persuasive. This result may surprise some readers.

The results above clearly indicate the importance to know whether the price increases or decreases after an increase in the level of advertising. This change in the price, we should recall, is uniquely related to the change in the price elasticity of demand η. Since p is always adjusted to maximize Π, MC is equated to the marginal revenue both before and after the additional advertising and, as any microeconomic textbook teaches,

$$\frac{p_i - MC}{p_i} = \frac{1}{\eta_i} \qquad i = 0, 1$$

when MC is constant, implying that $p_1 \gtreqless p_0$ as $\eta_1 \gtreqless \eta_0$. Combining this with the preceding result, we have $\Delta W_{DN} \gtreqless 0$ as $\eta_0 \gtreqless \eta_1$ (neglecting the area E), $\Delta W_{KM} < 0$ if $\eta_0 < \eta_1$, and ΔW_{KM} is of ambiguous sign if $\eta_0 > \eta_1$. That is to say, (1) if the demand becomes more elastic after advertising, it should be increased irrespective of the criterion of social welfare, i.e., irrespective of whether the advertising is informative or persuasive, (2) if the demand becomes less elastic after advertising and if the DN criterion is to be used, i.e., if the advertising is purely persuasive, advertising should be reduced provided $E < C + D$, and (3) if the demand becomes less elastic after advertising and if the KM criterion is to be used, i.e., if the advertising is purely informative, advertising may be too much or too little as C is larger or smaller than $A + E$. Clearly, this indicates that knowing the effect of advertising on the elasticity of demand is indispensable in evaluating the welfare

implications of advertising. This we have to leave as an empirical question; existing evidences, unfortunately, appear mixed. The fact that DN regards the case $\eta_1 < \eta_0$ more likely (DN, p.3) and KM regards the case $\eta_1 > \eta_0$ more likely (KM, Fn.2 and Fig.2) well exemplifies this.

2 SOME UNSOLVED QUESTIONS

To analyze the welfare implications of advertising is not an easy task. The works of DN and KM are of considerable merit in that they provided rigorous analyses on the subject. Some unsolved questions still remain, however.

First, both assumed $\Delta\Pi = 0$ on the ground of profit-maximization. Obviously, this holds only if the change in the level of advertising is infinitesimally small. When a public policy concerning advertising is to be considered, however, the policy will not be to change the level of advertising by a small amount but rather to change it substantially or even to ban it. $\Delta\Pi$ is not negligible in such a situation and actually must be negative in view of the definition of profit maximization. This suggests that ΔW is more likely to be negative than the two studies have shown.

Second, it is quite dubious if all the information delivered through advertising is correct. After all, "the 'authors' write their own reviews" (Kaldor, p.5) in advertising and it may be agreeable that "as a means of supplying information, it may be argued that advertising is largely biased and deficient" (ibid). DN's analysis obviously should lose its ground if this is the case.

Third, there is no reason that the partial analysis applied here

is sufficient for our purpose. Advertising in one market should affect the demands for other commodities and a general equilibrium analysis is needed to evaluate the effect of advertising in an industry on social welfare. Furthermore, these analyses neglect what Kaldor called "the external effects of advertising," i.e., "its indirect contribution to welfare through the changes which it helps to bring about in the economic organisation of society" (Kaldor, p.1). "It is at least arguable that if Press-advertising had not developed, the newspapers would gradually have devoted an increasing proportion of their space to giving information on consumers' goods, in the same way as they supply information on plays, horse-races, or the Stock Exchange" (Kaldor, p.5). It may be necessary, therefore, to think of two economic systems -- in one, information on commodities is provided through advertising; in another, no advertising is made and information is provided by independent organizations such as newspapers and "Consumer Reports" -- and compare the level of social welfare between them. Although this admittedly is an extremely difficult task, the author personally believes that no discussion on advertising is fruitful unless it somehow deals with this Kaldor's question.

Finally, and perhaps most profoundly, the author is not sure if the concept of consumer's surplus makes any sense when advertising is thought to affect the preference systems of consumers. For instance, in the DN criterion, what is the rationale to include E (in whichever figure) in ΔCS? It represents the sum of differences between the subjective value of the commodity and the cost of purchase for those who were persuaded to believe the value is more than the price. Can we say that they are happier now? The present author is quite skeptical. Not only is he skeptical on this inclusion of E in ΔW but skeptical on the

meaning of consumer's surplus itself when advertising conveys any persuasive element. In fact, we should perhaps go even further. If the preference system of an individual is so fragile, can we base our judgement on the desirable economic system (in whatever sense) on individual value judgement? The idea of utilitarianism or consumers' sovereignty economists have long accustomed to may be powerless in this age of everyday persuasion by advertisers.

NOTES

1. DN also discusses the cases of oligopoly and monopolistic competition, and KM also discusses the case in which information spreads through demonstration effect.

2. KM's article treats dynamic aspects and defines W as the present value of the stream of welfare level; this, however, does not change the substance of the argument.

3. As more consumers participate the market given better information and the price declines, consumers are better off. This may be merely intuitive.

REFERENCES

Avinash Dixit and Victor Norman, "Advertising and Welfare," Bell Journal of Economics, 9(1), Spring 1978, 1-17.

Nicholas Kaldor, "The Economic Aspects of Advertising," Review of Economic Studies, 18(1), 1949, 1-27.

Y. Kotowitz and F. Mathewson, "Informative Advertising and Welfare," American Economic Review, 69(3), June 1979, 284-94.

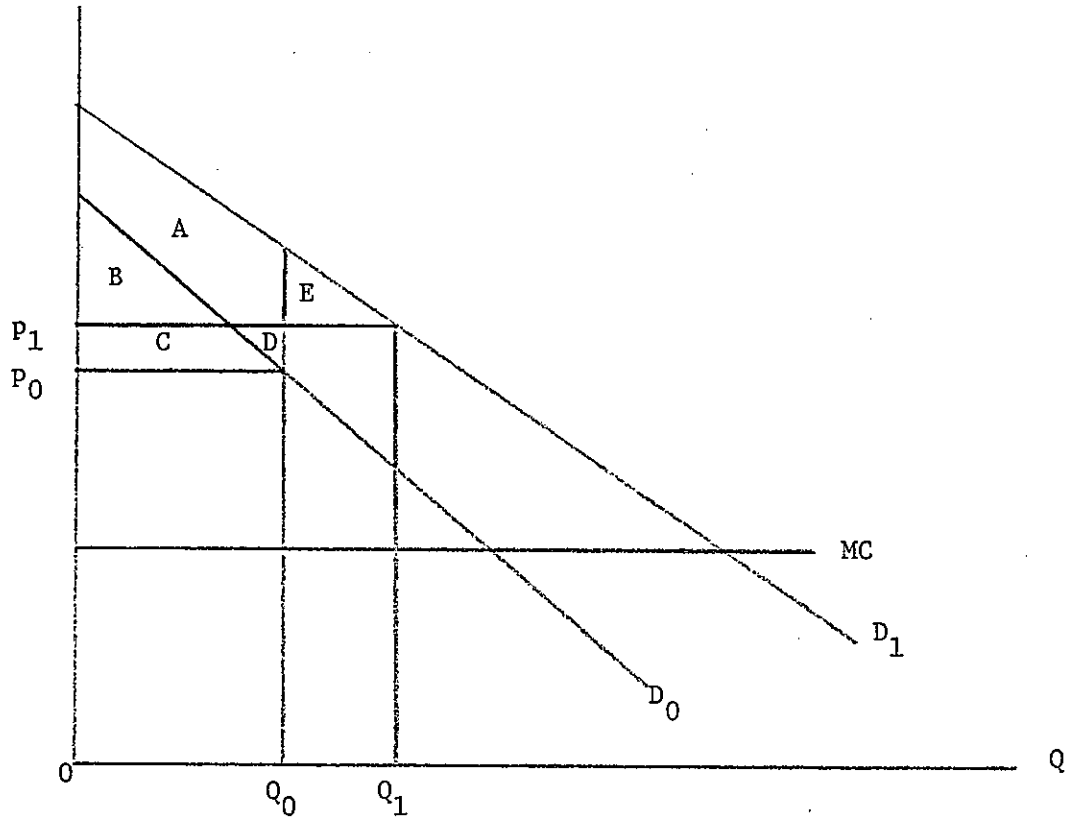

Fig. 1

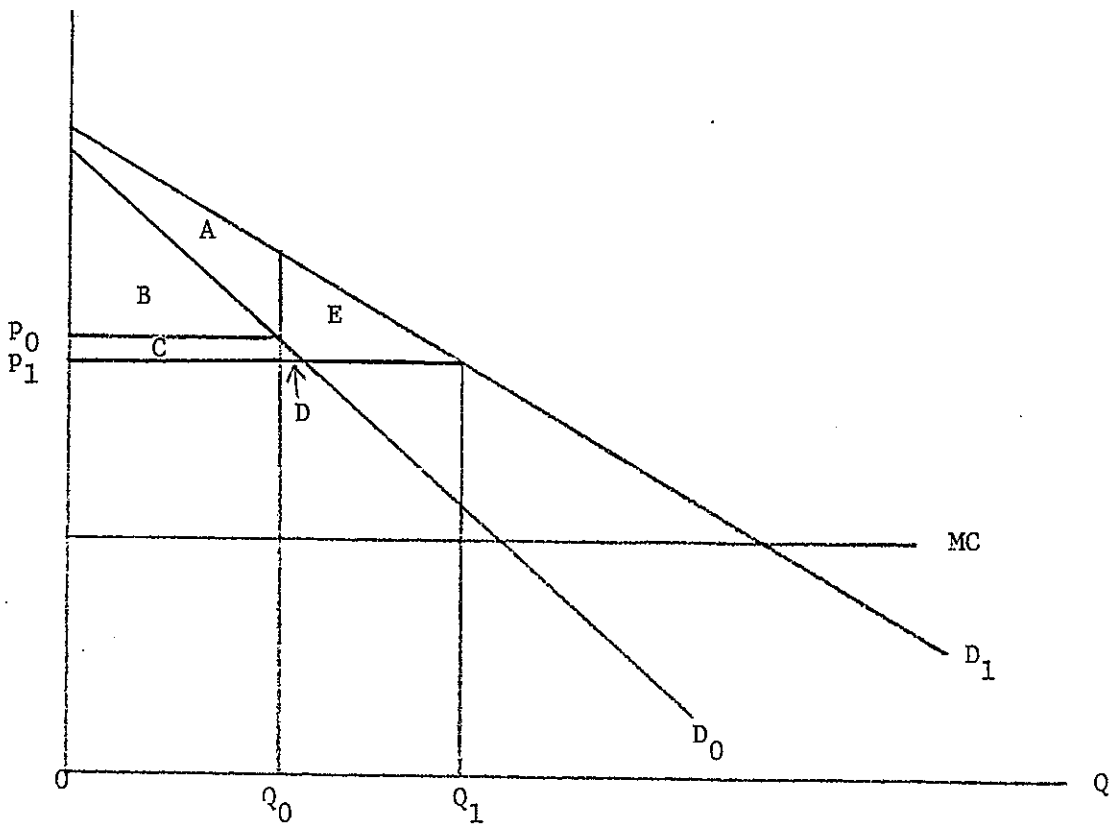

Fig. 2